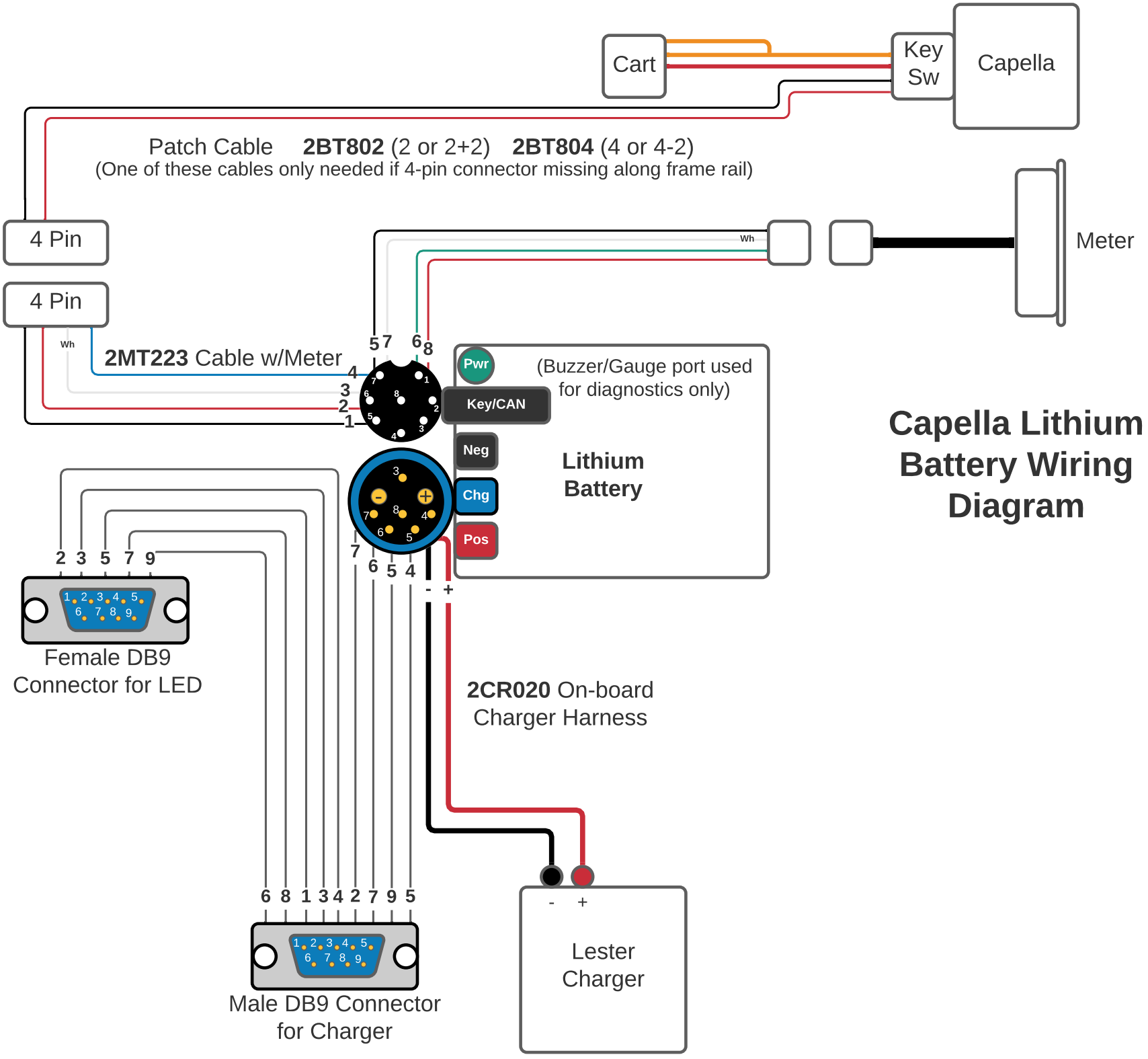
Capella Lithium Battery Wiring Diagram
Cart
Key Sw
Capella
Patch Cable 2BT802 (2 or 2+2) 2BT804 (4 or 4-2)
(One of these cables only needed if 4-pin connector missing along frame rail)
4 Pin
4 Pin
Wh
2MT223 Cable w/Meter
Wh
Meter
Pwr
Key/CAN
Neg
Chg
Pos
(Buzzer/Gauge port used for diagnostics only)
Lithium Battery
2 3 5 7 9
Female DB9 Connector for LED
2CR020 On-board Charger Harness
6 8 1 3 4 2 7 9 5
Male DB9 Connector for Charger
Lester Charger